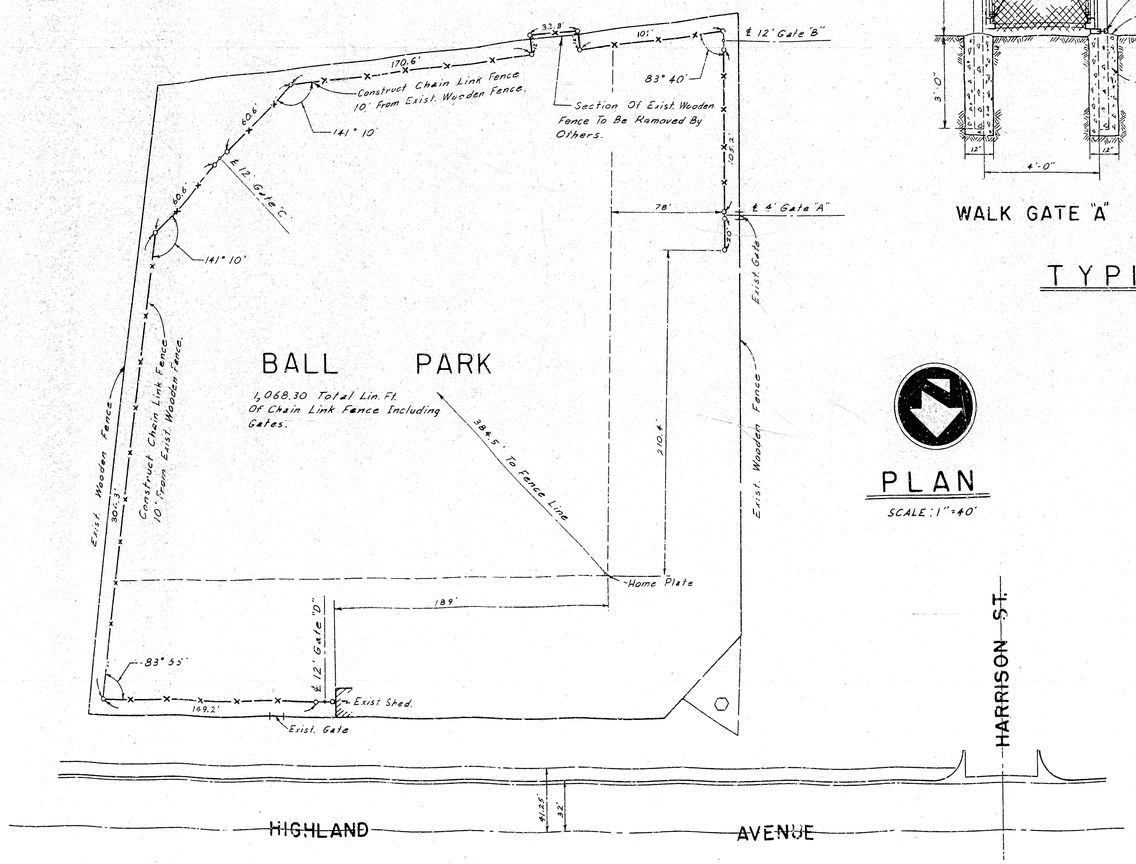

PLAN

SCALE: 1" = 40'

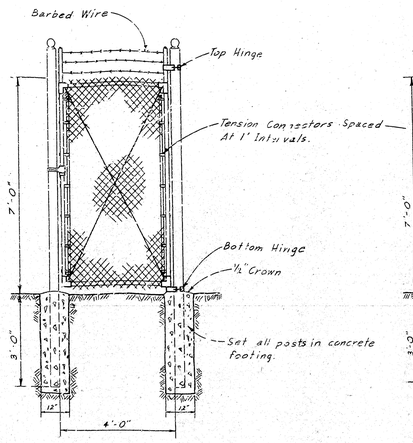

WALK GATE "A"

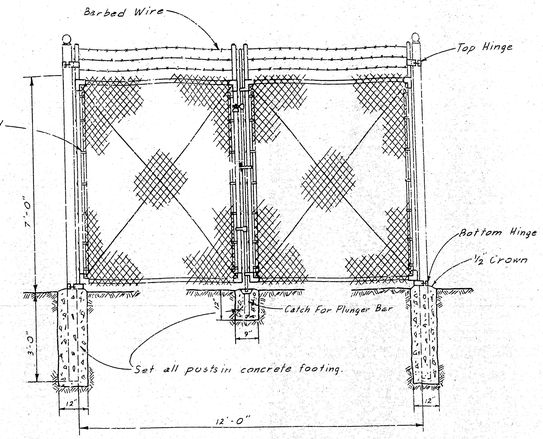

DRIVE GATE "B" "C" "D"

TYPICAL GATE DETAILS

SCALE: ½" = 1'

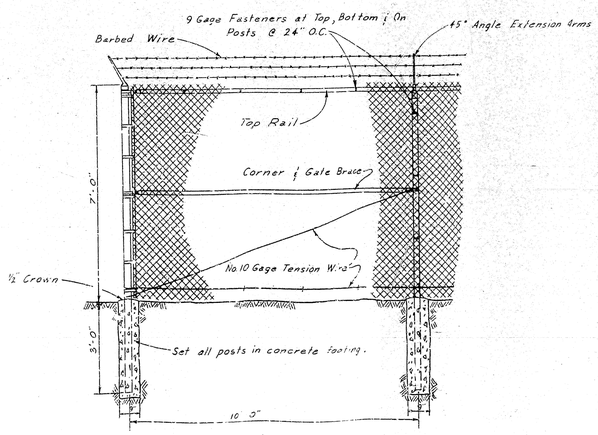

TYPICAL FENCE DETAIL

SCALE: ½" = 1'

GENERAL NOTES

1. All End & Corner Posts To Be 3" Standard Pipe (Galv.)
2. All Intermediate Posts To Be 2½" Standard Pipe (Galv.)
3. All Top Rails & Braces To Be 1½" Standard Pipe (Galv.)
4. Provide 9 Gage 2" Diamond Mesh Galv. Afterweave Chain Link Fence.
5. Post Tops, Extension Arms, Stretcher Bars And Other Required Fittings And Hardware Shall Be Steel Or Malleable Iron Or Wrought Iron [illegible] Shall Be (Galv.)
Barbed Wire – 3 Lines Of [illegible] Pattern, Each Composed Of Two Strands Of No. 12½ [illegible] Wire (Galv.)
All Line Posts Shall Be Sp[illegible] At Not More Than 10' Interva[illegible]
Footing Shall Be Portland C[illegible] Concrete As Per Standard Specification No. 2271 On [illegible] In The Office Of The City Engineer.
9. All Gate Posts To Be 3½" Standard Pipe (Galv.)
10. All Gate Frames Shall Be 1½" Standard Pipe (Galv.)
11. Gate Frames Shall Be Cross Trussed With 3/8" Adjustable Truss Rods.
12. The Corners Of Gate Frames Shall Be Fastened Together And Reinforced With A Malleable Iron Fitting Designed For The Purpose Or By Welding.
13. Welding And Galvanizing Shall Conform To The Provisions In Section 55-3.27 And Section 55-3.28, Standard Specifications, State Of California, Division Of Highways, January, 1960.
14. The Gates Shall Be Hung By At Least 2 Steel Or Malleable Iron Hinges Not Less Than 3" In Width, So Designed As To Securely Clamp To The Gate Post And Permit The Gate To Be Swung Back Against The Fence Bottom Hinge To Have Ball and Socket.
15. Gates Shall Be Provided With A Combination Steel Or Malleable Iron Catch And Locking Attachment Of Approved Design.
16. Stops To Hold Gates Open And A Center Rest With Catch Shall Be Provided Where Required.

APPROVED February 17, 1965		DEPARTMENT OF ENGINEERING
		CITY OF SAN BERNARDINO
REGISTERED CIVIL ENGINEER NO.	CITY ENGINEER	CHAIN LINK FENCE
DRAWING NO. 3110	DRAWN BY RUB	PERRIS HILL BALL PARK
SHEET 1 / 1	CHECKED BY DG	
	RECOMMENDED	

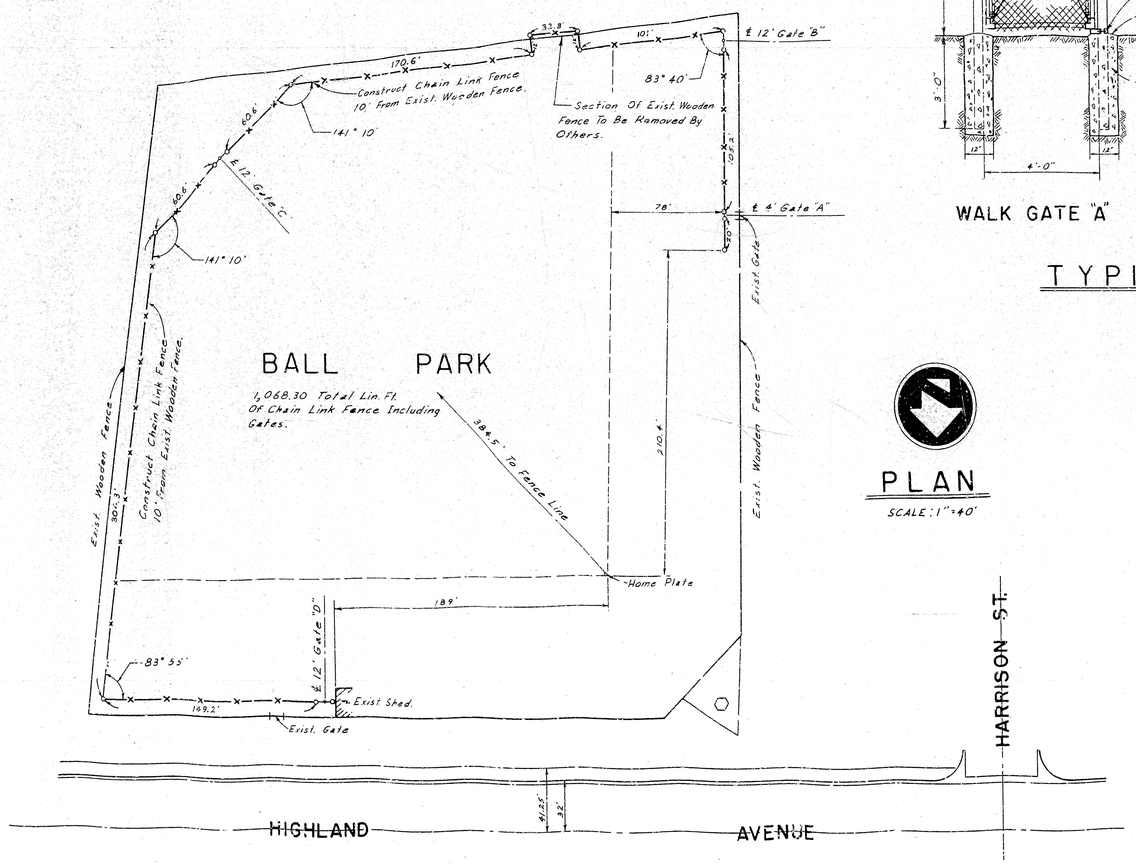

PLAN

SCALE: 1" = 40'

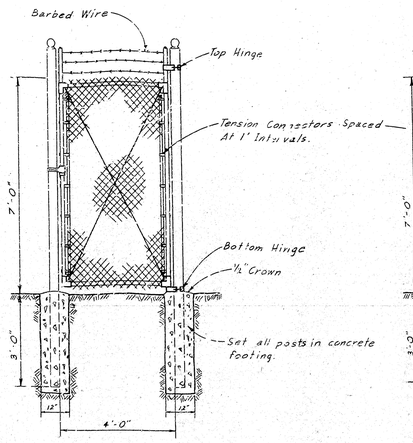

WALK GATE "A"

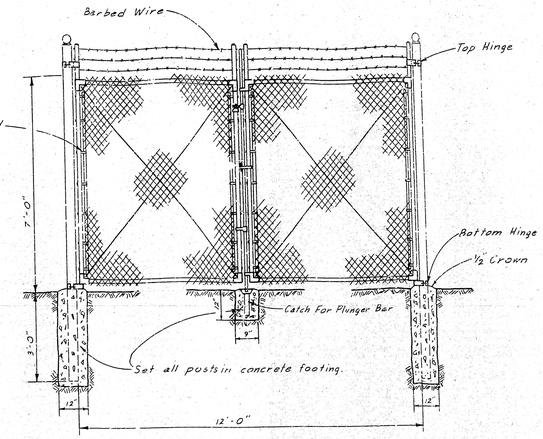

DRIVE GATE "B" "C" "D"

TYPICAL GATE DETAILS

SCALE: ½" = 1'

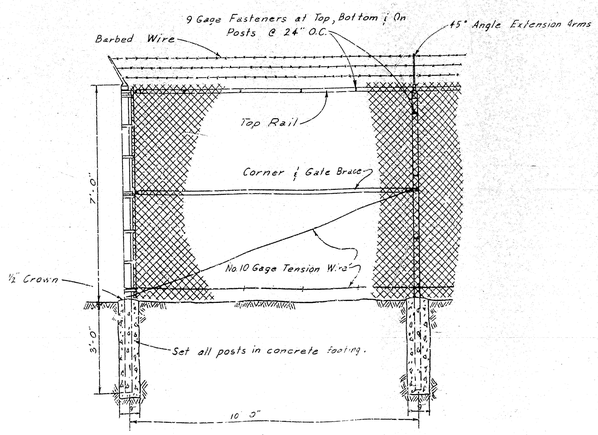

TYPICAL FENCE DETAIL

SCALE: ½" = 1'

GENERAL NOTES

1. All End & Corner Posts To Be 3" Standard Pipe (Galv.)
2. All Intermediate Posts To Be 2½" Standard Pipe (Galv.)
3. All Top Rails & Braces To Be 1½" Standard Pipe (Galv.)
4. Provide 9 Gage 2" Diamond Mesh Galv. Afterweave Chain Link Fence.
5. Post Tops, Extension Arms, Stretcher Bars And Other Required Fittings And Hardware Shall Be Steel Or Malleable Iron Or Wrought Iron [illegible] Shall Be (Galv.)
Barbed Wire – 3 Lines Of [illegible] Pattern, Each Composed Of Two Strands Of No. 12½ [illegible] Wire (Galv.)
All Line Posts Shall Be Sp[illegible] At Not More Than 10' Interva[illegible]
Footing Shall Be Portland C[illegible] Concrete As Per Standard Specification No. 2271 On [illegible] In The Office Of The City Engineer.
9. All Gate Posts To Be 3½" Standard Pipe (Galv.)
10. All Gate Frames Shall Be 1½" Standard Pipe (Galv.)
11. Gate Frames Shall Be Cross Trussed With 3/8" Adjustable Truss Rods.
12. The Corners Of Gate Frames Shall Be Fastened Together And Reinforced With A Malleable Iron Fitting Designed For The Purpose Or By Welding.
13. Welding And Galvanizing Shall Conform To The Provisions In Section 55-3.27 And Section 55-3.28, Standard Specifications, State Of California, Division Of Highways, January, 1960.
14. The Gates Shall Be Hung By At Least 2 Steel Or Malleable Iron Hinges Not Less Than 3" In Width, So Designed As To Securely Clamp To The Gate Post And Permit The Gate To Be Swung Back Against The Fence Bottom Hinge To Have Ball and Socket.
15. Gates Shall Be Provided With A Combination Steel Or Malleable Iron Catch And Locking Attachment Of Approved Design.
16. Stops To Hold Gates Open And A Center Rest With Catch Shall Be Provided Where Required.

APPROVED February 17, 1965		DEPARTMENT OF ENGINEERING
		CITY OF SAN BERNARDINO
REGISTERED CIVIL ENGINEER NO.	CITY ENGINEER	CHAIN LINK FENCE
DRAWING NO. 3110	DRAWN BY RUB	PERRIS HILL BALL PARK
SHEET 1 / 1	CHECKED BY DG	
	RECOMMENDED	

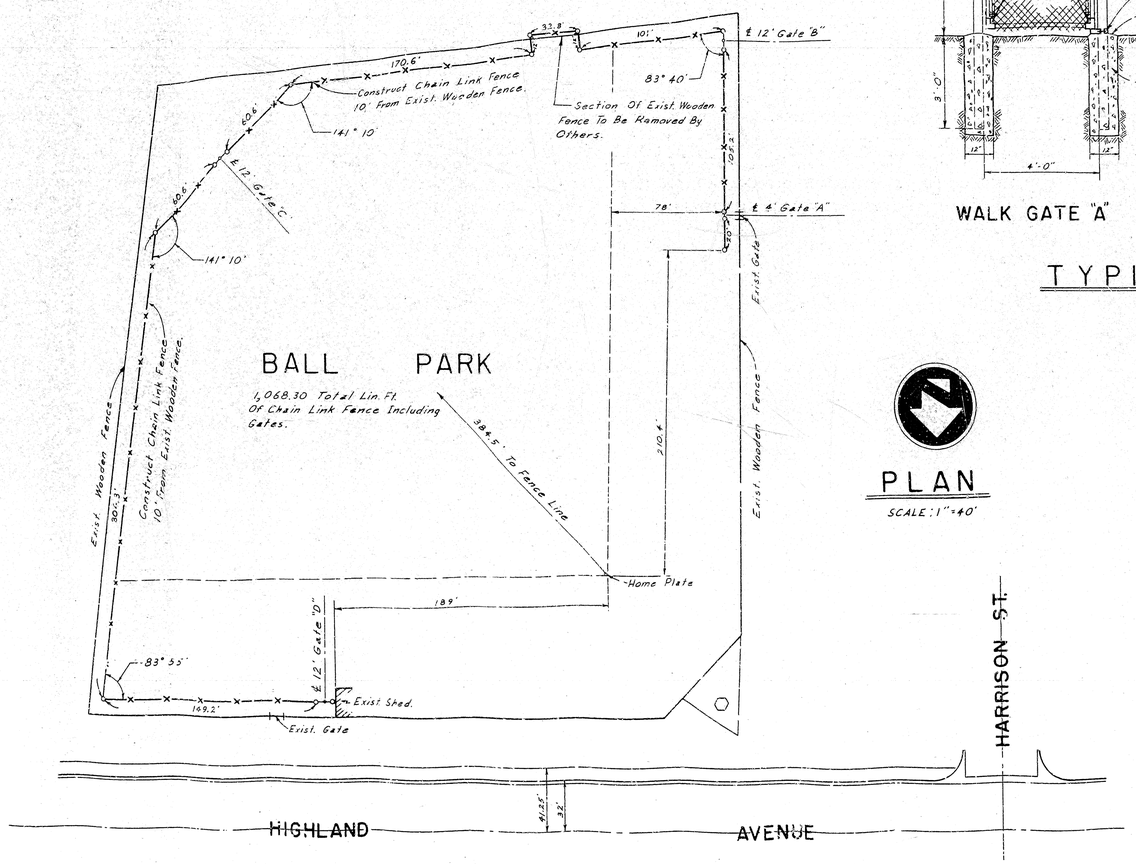

PLAN

SCALE: 1" = 40'

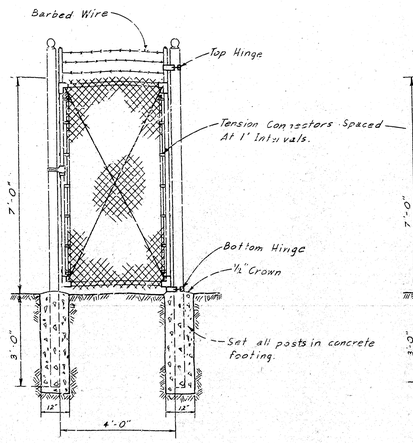

WALK GATE "A"

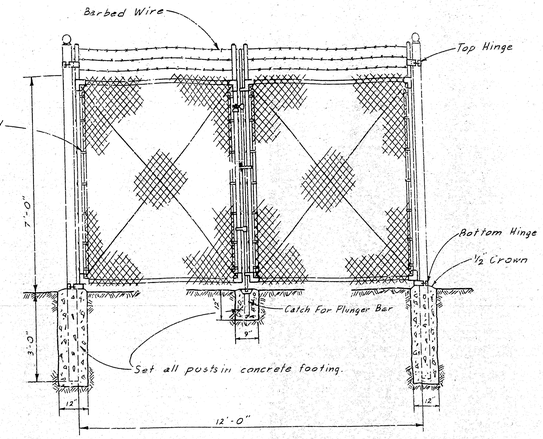

DRIVE GATE "B" "C" "D"

TYPICAL GATE DETAILS

SCALE: ½" = 1'

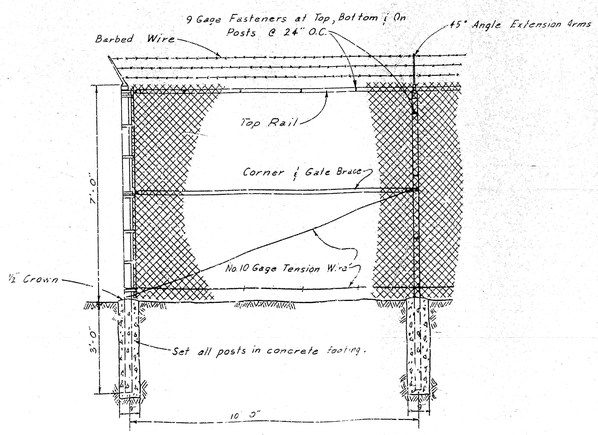

TYPICAL FENCE DETAIL

SCALE: ½" = 1'

GENERAL NOTES

1. All End & Corner Posts To Be 3" Standard Pipe (Galv.)
2. All Intermediate Posts To Be 2½" Standard Pipe (Galv.)
3. All Top Rails & Braces To Be 1½" Standard Pipe (Galv.)
4. Provide 9 Gage 2" Diamond Mesh Galv. Afterweave Chain Link Fence.
5. Post Tops, Extension Arms, Stretcher Bars And Other Required Fittings And Hardware Shall Be Steel Or Malleable Iron Or Wrought Iron [illegible] Shall Be (Galv.)
Barbed Wire – 3 Lines Of [illegible] Pattern, Each Composed Of Two Strands Of No. 12½ [illegible] Wire (Galv.)
All Line Posts Shall Be Sp[illegible] At Not More Than 10' Interva[illegible]
Footing Shall Be Portland C[illegible] Concrete As Per Standard Specification No. 2271 On [illegible] In The Office Of The City Engineer.
9. All Gate Posts To Be 3½" Standard Pipe (Galv.)
10. All Gate Frames Shall Be 1½" Standard Pipe (Galv.)
11. Gate Frames Shall Be Cross Trussed With 3/8" Adjustable Truss Rods.
12. The Corners Of Gate Frames Shall Be Fastened Together And Reinforced With A Malleable Iron Fitting Designed For The Purpose Or By Welding.
13. Welding And Galvanizing Shall Conform To The Provisions In Section 55-3.27 And Section 55-3.28, Standard Specifications, State Of California, Division Of Highways, January, 1960.
14. The Gates Shall Be Hung By At Least 2 Steel Or Malleable Iron Hinges Not Less Than 3" In Width, So Designed As To Securely Clamp To The Gate Post And Permit The Gate To Be Swung Back Against The Fence Bottom Hinge To Have Ball and Socket.
15. Gates Shall Be Provided With A Combination Steel Or Malleable Iron Catch And Locking Attachment Of Approved Design.
16. Stops To Hold Gates Open And A Center Rest With Catch Shall Be Provided Where Required.

APPROVED February 17, 1965		DEPARTMENT OF ENGINEERING
		CITY OF SAN BERNARDINO
REGISTERED CIVIL ENGINEER NO.	CITY ENGINEER	CHAIN LINK FENCE
DRAWING NO. 3110	DRAWN BY RUB	PERRIS HILL BALL PARK
SHEET 1 / 1	CHECKED BY DG	
	RECOMMENDED	